Description

Weights

Tyres/Chassis

Dimensions

Performances

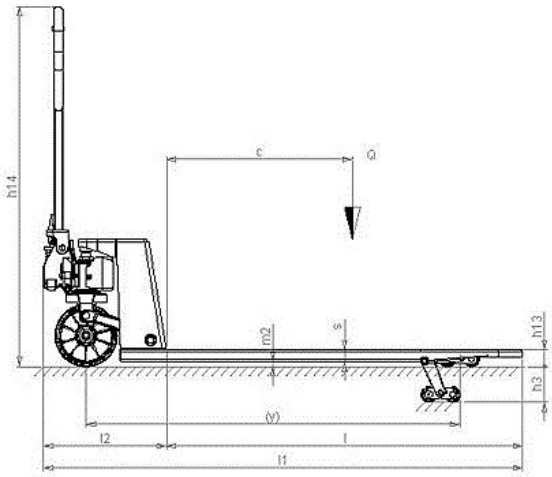
h14
c
Q
m2
s
h13
h3
(y)
l2
l
l1

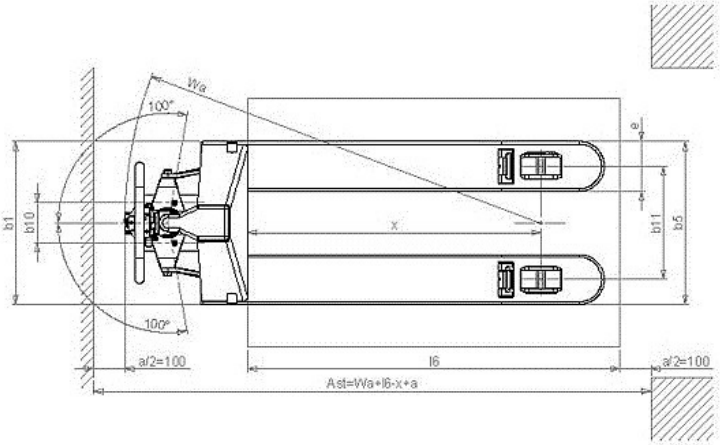
Wa
100°
e
b1
b10
x
b11
b5
100°
a/2=100
l6
a/2=100
Ast=Wa+l6-x+a